INSTALLATION INSTRUCTIONS

Congratulations – your new Work-Rite load assists are quality products capable of improving the handling and comfort of your vehicle while under load. As with all products, proper installation is the key to obtaining all of the benefits your kit is capable of delivering. Please take a few minutes to read through the instructions to identify the components and learn where and how they are used. It is a good idea to start by comparing the parts in your kit with the parts list below.

NOTE: IF ANY PARTS ARE MISSING FROM THE KIT, PLEASE CALL 1-800-888-0650.
PLEASE DO NOT CALL OR RETURN THE KIT TO THE DEALER.

Be sure to take all applicable safety precautions during the installation of the kit. The instructions listed in this brochure and the illustrations all show the left, or driver's side of the vehicle. To install the right side assembly simple follow the same procedures.

STEP 1 – PREPARE THE VEHICLE

With the vehicle on a solid, level surface chock the front wheels. Remove the negative battery cable. Remove the jounce bumpers located under the frame rail. The jounce bumpers, bolts, and nuts will not be re-used with this kit.

STEP 2 – PRE-ASSEMBLE THE KIT

Insert the frame brace into the frame, being careful not to pinch any of the existing lines inside the frame rail. Slide the upper bracket onto the frame rail and frame brace making sure that all the holes line up. ***See Figures "A" & "B".*** use the holes in the bracket as a template, mark and drill the holes in the frame rail. ***Before drilling the holes make sure all electrical, brake and fuel lines are cleared from the path of the drill. It is recommended to place a thin piece of wood between the frame rail and the existing lines.*** After drilling the holes, attach the upper bracket with the 3/8"-16 x 4" hex bolts.

NOTE: An optional spacer may be installed to engage the Work-Rite sooner when a load is applied. To install, place between the Work-Rite and the upper bracket. If 1 spacer is installed, use the 3/8"-16 x 1-1/2" bolts, or the 2" bolts for 2 spacers. There should be 1/4" to 3/8" between the Work-Rite and the axle. See Figure "B".

STEP 3 – INSTALLING THE ASSEMBLY ON THE VEHICLE

Attach the Work-Rite to the upper bracket using 3/8"-16 x 1" hex bolts, large flat washers, and flange lock nuts inserted through the bottom of the Work-Rite and into the hole in the upper bracket. ***See Figure "A".***

STEP 4 – FINISH UP

Remove the wheel chocks and reconnect the battery cable. Now you're finished and ready to put your Work-Rite to use!

PARTS LIST

WORK-RITE	1259	2	3/8"-16 X 1-1/2" HEX BOLT	2
UPPER BRACKET	5647	2	3/8"-16 X 2" HEX BOLT	2
LEFT FRAME BRACE	5249	1	3/8"-16 X 4" HEX BOLT	4
RIGHT FRAME BRACE	5248	1	3/8"-16 FLANGE LOCK NUT	6
OPTIONAL SPACERS	0013	4	3/8" LARGE FLAT WASHERS	2
3/8"-16 X 1" HEX BOLT		2		

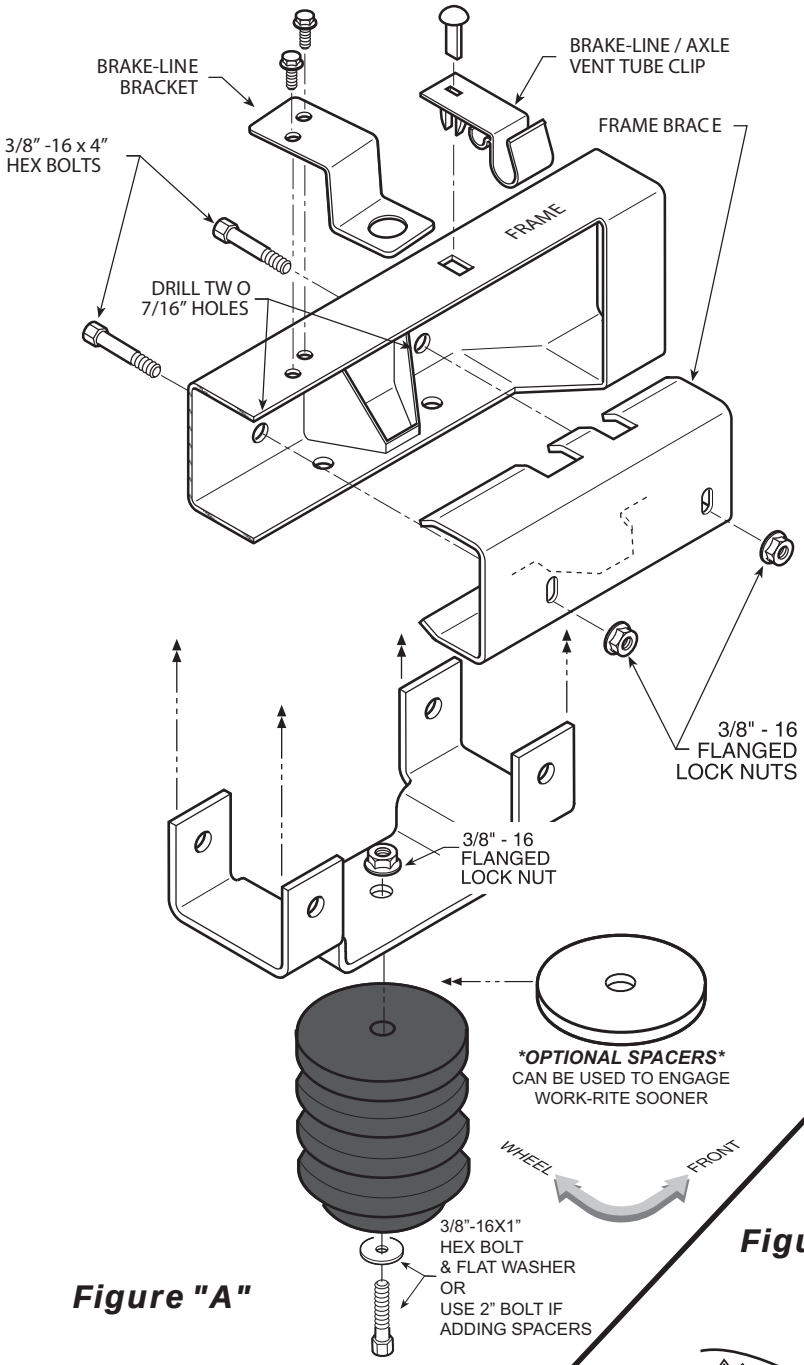

Figure "A"

Figure "B"

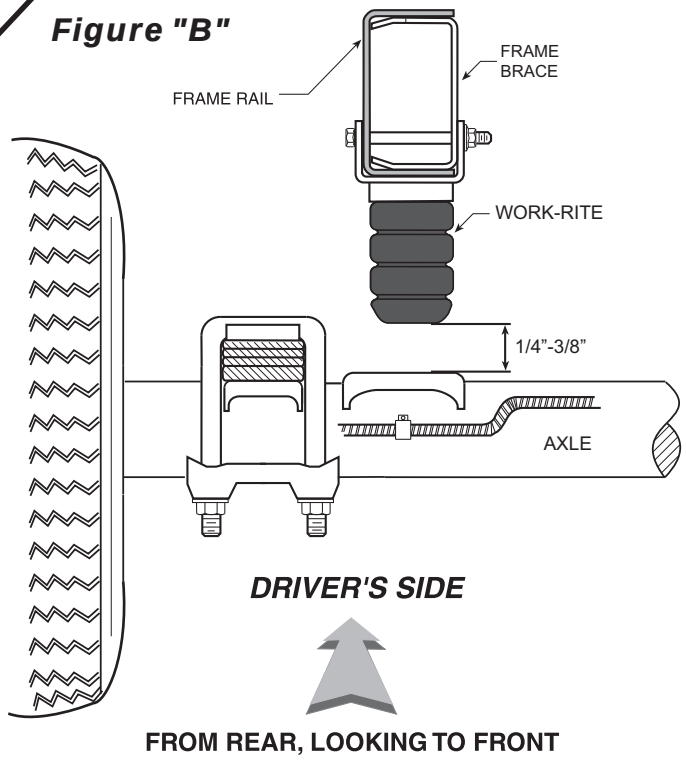

Do Not Return This Product to the Dealer or Distributor

If you are

- **missing parts,**
- **experiencing installation problems, or**
- **have technical concerns regarding this product,**

you may contact a Firestone Technical Service Representative at **rrtech@fsip.com** or at 800-888-0650 (option 1, and then option 2). Representatives are available from 7:30 a.m. – 4:30 p.m. Eastern on Monday – Friday, excluding holidays. If you are located outside of the United States, you should first contact your distributor or dealer directly with any issues.

When contacting Technical Service, please have the kit or part # ready, along with the make, model, and year of the vehicle. You may also need to provide details, such as 2WD/4WD or if the vehicle has been lifted or lowered from stock height.

If you have a warranty concern, please include in your email a detailed description of the situation, a photo(s) of the issue, and your contact information, including ship-to address.

WARRANTY COVERAGE*— The Ride-Rite™ kits, components, and accessories are warranted against defects in workmanship and materials. This warranty does not cover service or labor charges, neglect…to the product.

PERIOD OF COVERAGE:

- Ride-Rite air springs – Lifetime Limited
- Sport-Rite air springs – Lifetime Limited
- Coil-Rite air springs – Lifetime Limited
- Level-Rite air springs – Lifetime Limited
- Work-Rite load assists – 2 Years Limited
- Air-Rite accessories – 2 Years Limited
- Brackets, hardware, fittings, air line, and other components – 2 Years Limited

HOW TO MAKE A WARRANTY CLAIM — If you purchased your air springs in the U.S. or Canada and believe you have a part with a warrantable defect, call Firestone directly at 1-800-888-0650.

International customers should contact their distributors or dealers directly with any problems.

(*) Please refer to the “Firestone Limited Lifetime Air Spring Warranty” for details, terns, and conditions.

WARRANTY QUESTIONS

Go to **www.riderite.com/installation-support**

Select “Warranty Info” tab